QCS Design
(The 1st consideration for the updated IR)

Norihito Ohuchi, Masafumi Tawada

SuperKEKB IR Design

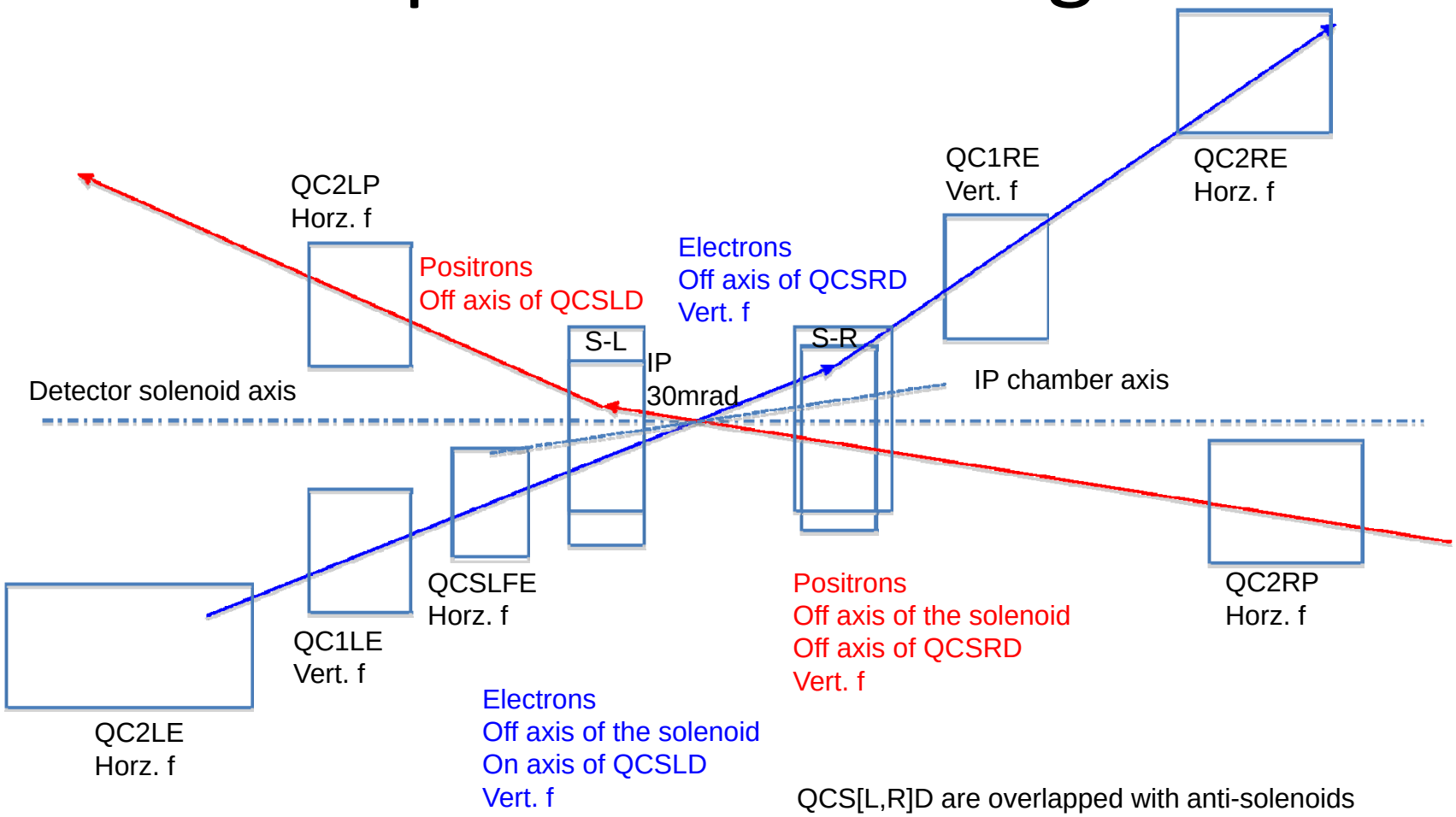

IR Beam Envelops based on the beam optics by Koiso

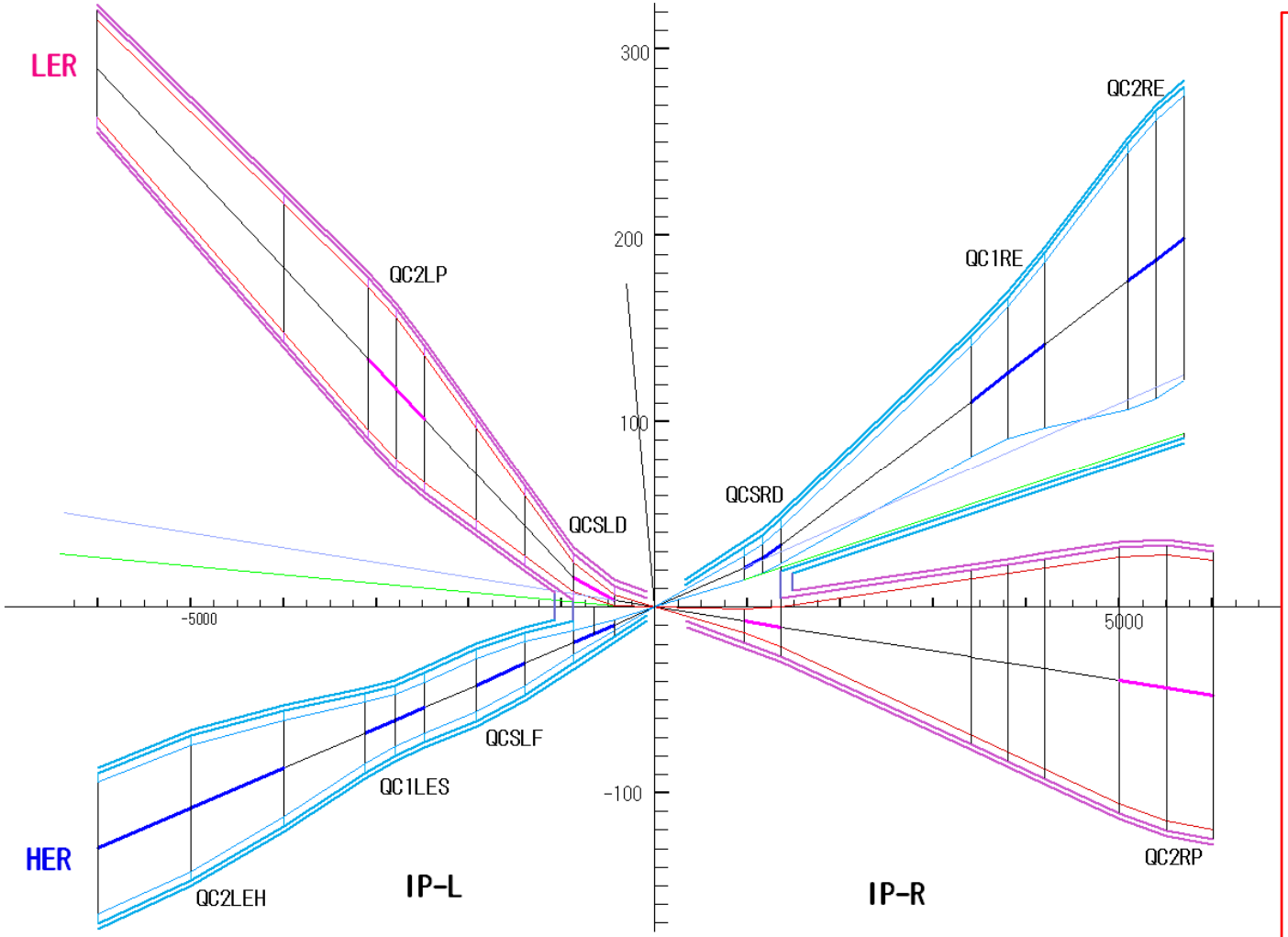

HER

QC2REH
17.49 T/m, 10.49 T

QC1RES
15.87 T/m, 12.69 T

QCSRD
36.38 T/m, 12.11 T

QCSLD
53.01 T/m, 23.33 T

QCSLF
44.34 T/m, 23.06 T

QC1LES
34.79 T/m, 22.27 T

QC2LEH
5.13 T/m, 10.26 T

LER

QC2RP
3.06 T/m, 3.10 T

QCSRD
36.38 T/m, 12.11 T

QCSLD
53.01 T/m, 23.33 T

QC2LP
10.58 T/m, 6.49 T

The space for the magnet design is defined by the area of 5 σ of beam size + 5 mm for the design margin of beam pipe + 3mm thickness of beam pipe.

Final focus quadrupole (QCSRD and QCSLD)

- QCSRD

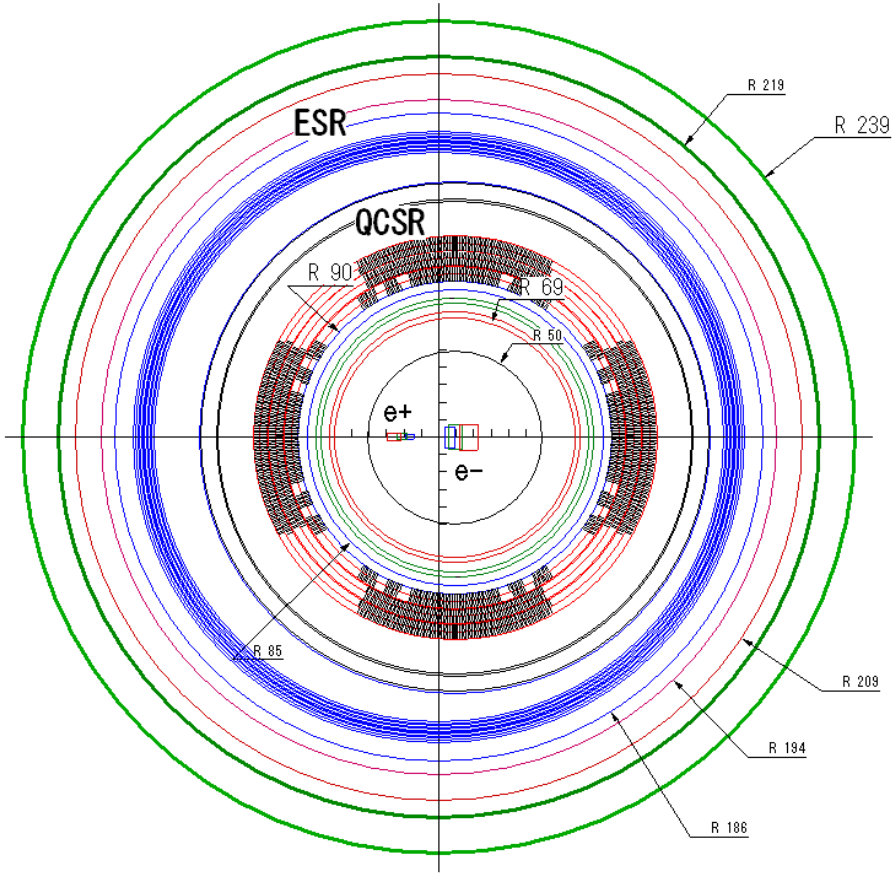

Cross section of QCSRD

Design parameters of QCSRD

- 6 layer coils (3-double pane cake coils)
- Inner coil radius : 90.0 mm
- Outer coil radius : 116.8 mm
- Cable size : 1.1 mm × 4.1 mm
  - 1.1 mm × 7.0 mm (KEKB)
- Number of turns : 271 in one pole
  - 1st layer = 38, 2nd layer = 39
  - 3rd layer = 46, 4th layer = 47
  - 5th layer = 50, 6th layer = 51
- Field gradient : 40.49 T/m
- Magnet current : 1197.6 A
- Magnetic length : 0.299m
- Inductance : 69.98 mH
- Stored energy : 49.3 kJ
- Operation temperature : 4.5 K
- Operation point w.r.t. SC limit : 76%
- Magnet bore : room temp.

QCSRD R&D Magnet and Cryostat Design

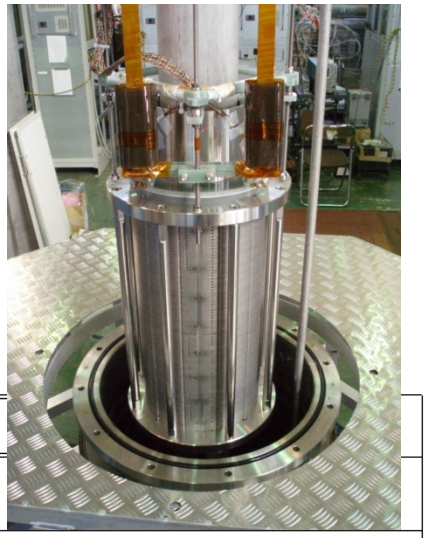

The R&D magnet was successfully energized over the design current without quench.

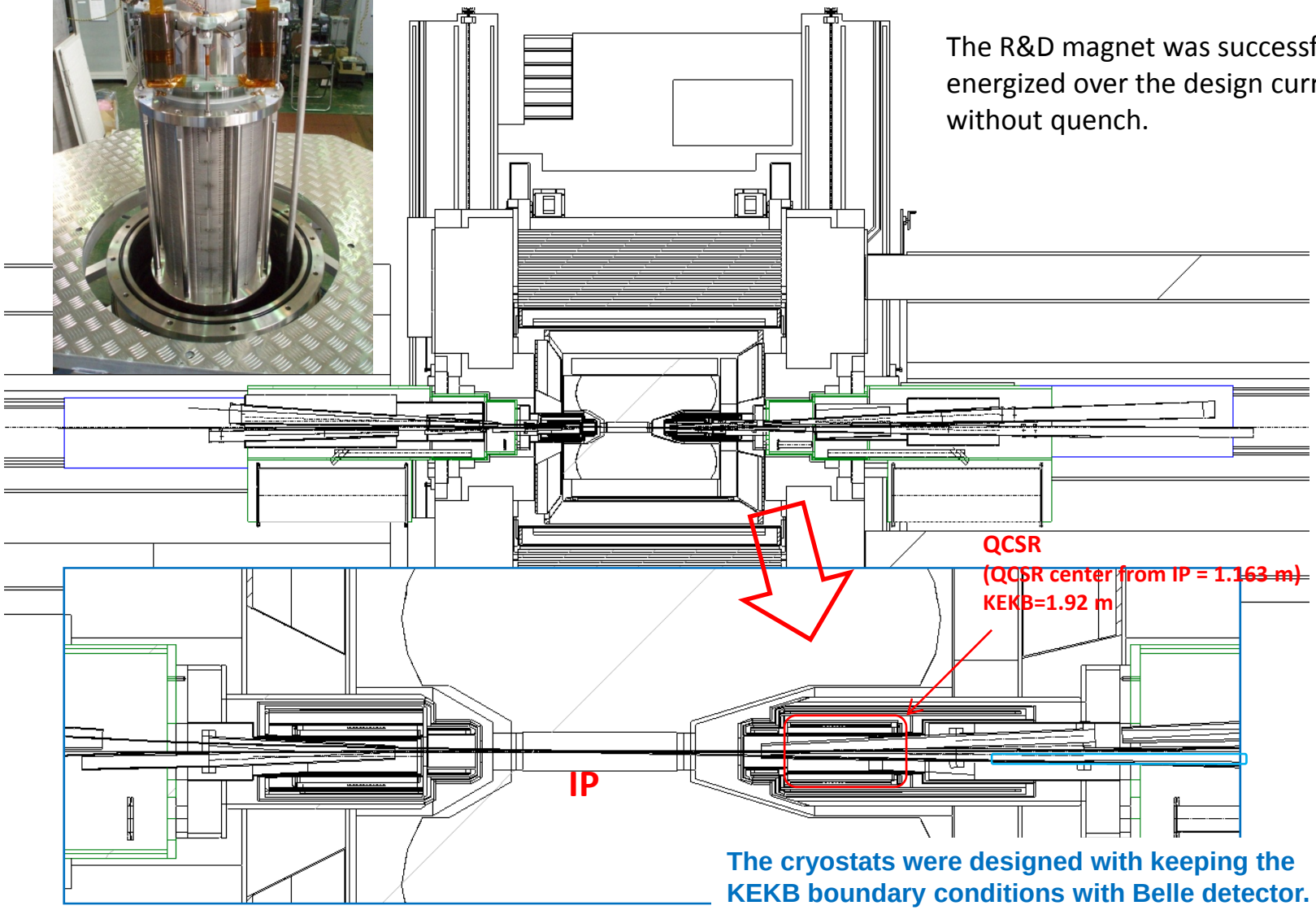

The cryostats were designed with keeping the KEKB boundary conditions with Belle detector.

QCSLD cooled at 1.9 K

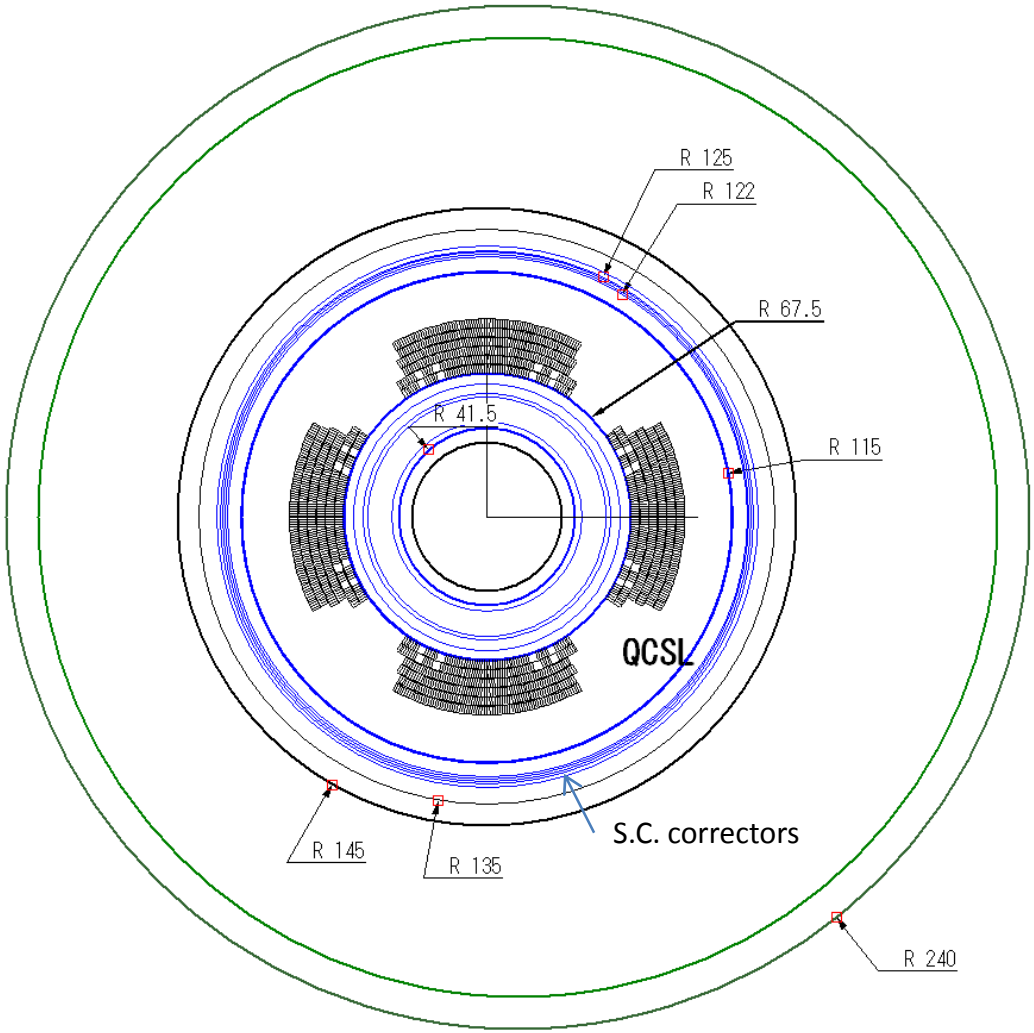

Cross section of magnet cryostat

Design parameters of QCSLD

- 6 layer coils
- Inner coil radius : 67.5 mm
- Outer coil radius : 92.7 mm
- Cable size : 1.1 mm × 4.1 mm
  - Cu ratio = 1.3
- Number of turns : 208 in one pole
  1st layer = 29, 2nd layer = 31
  3rd layer = 35, 4th layer = 37
  5th layer = 37, 6th layer = 39
- *G* by 2D cross section : 121.1 T/m
- Magnet current : 2834.8 A
- Magnetic length : 192.6 mm
- Estimated physical magnet length: 435 mm
- Operation temperature : 1.9 K
- Max. field in the magnet : 7.62 T
  - (without Belle and compensation solenoid fields)
- Operation point w.r.t. SC limit : 74%
- Magnet bore : room temp.

Cable performance at 1.9 K for QCSLD

NbTi

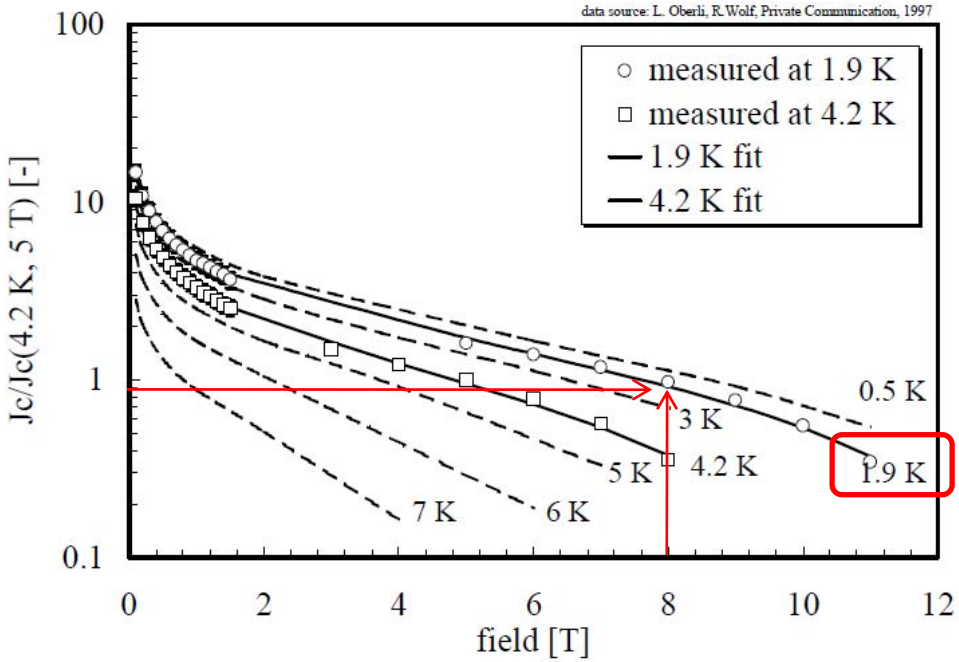

Fig. 7. Field dependence of the normalized $J_c(B,T) / J_c$ (5 T, 4.2 K) for a typical LHC strand [13]-[14], measured at 1.9 and 4.2 K. The fit to the data is shown (solid lines) together with curves generated for different temperatures (dashed lines).

From LHC-Project Report 358

NbTi cable for QCSRD

I_c = 3495 A @ 5T and 4.2 K

Cu ratio = 1.8

Cable size = 1.1 mm × 4.1 mm

By decreasing temperature from 4.2 K to 1.9 K

The conductor can transfer the current of 0.9 × I_c @ 5T and 4.2 K

I_c = 3145.5 A @ 8T and 1.9 K

Cu ratio = 1.3

I_c = 4253 A @ 8T and 1.9 K

QCSLD cryostat

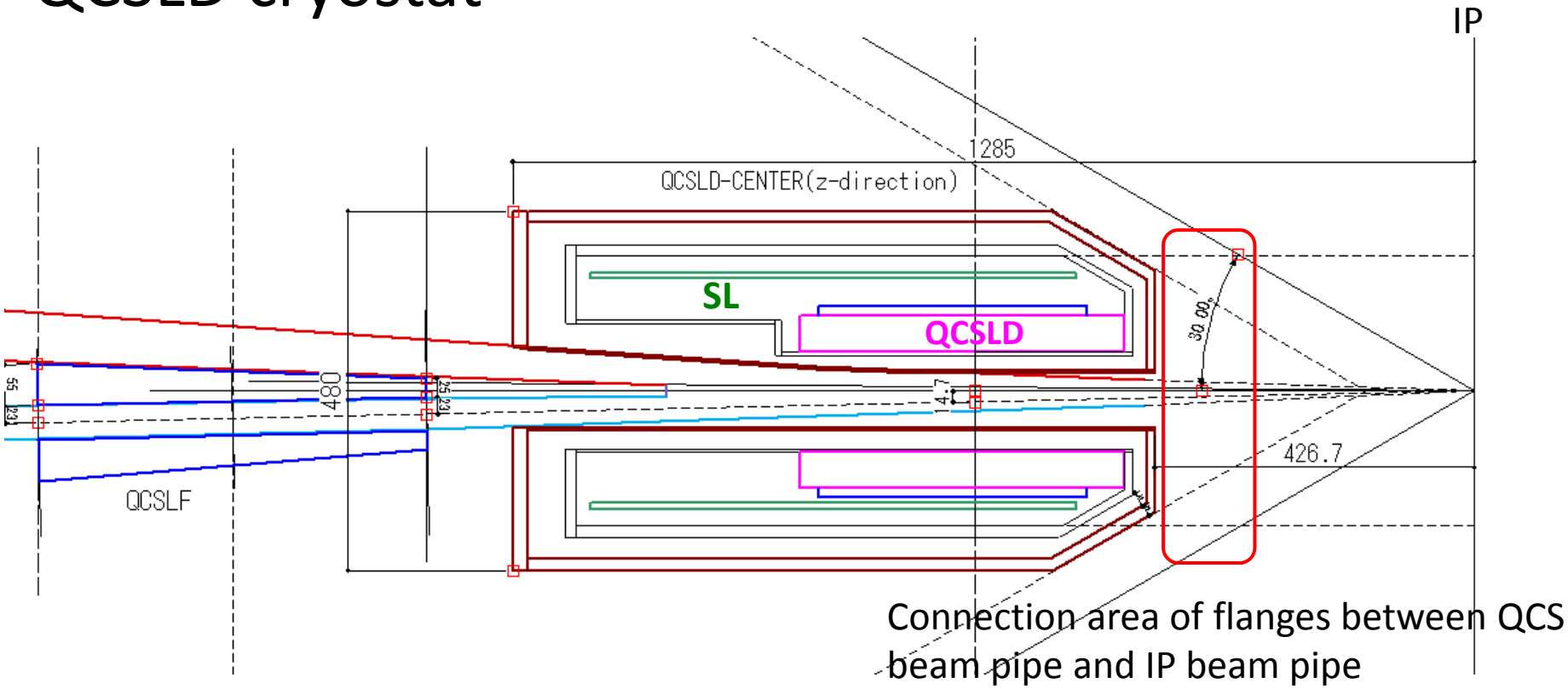

The connection between the QCS beam pipe and the IP beam pipe are very difficult.

- In the left side of IP, the QCS cryostat is considered to be inserted into Belle detector with connecting to IP beam pipe and holding SVD and the beam pipe.
- The QCS cryostat bore works as the beam pipe (warm bore).

Magnetic field profile by QCS in Belle detector

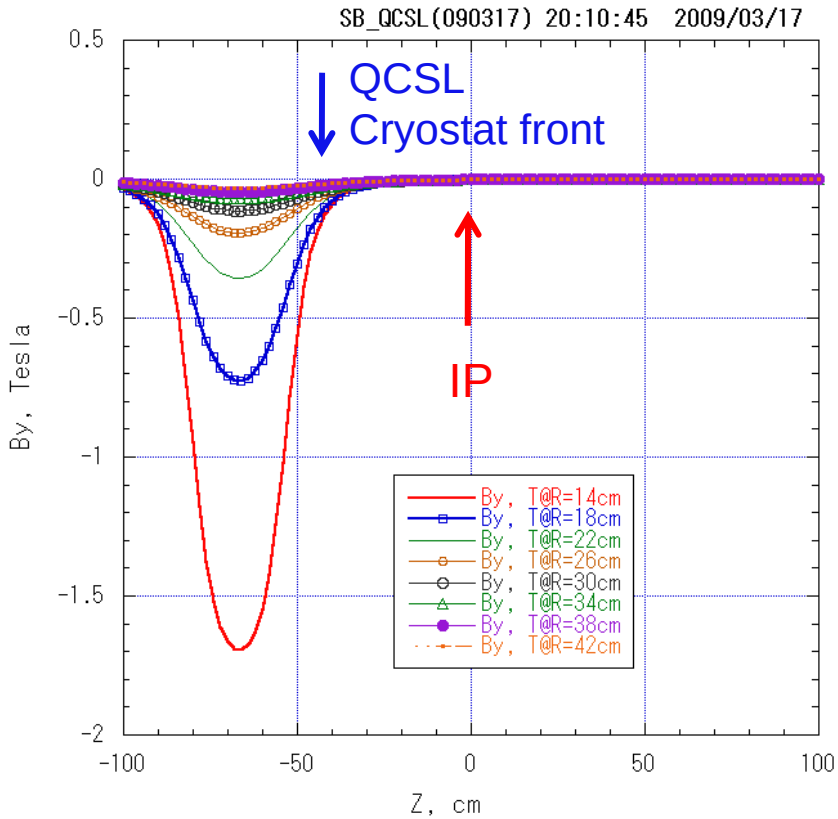

By components by QCSL
Location: $\theta = 0$ degree

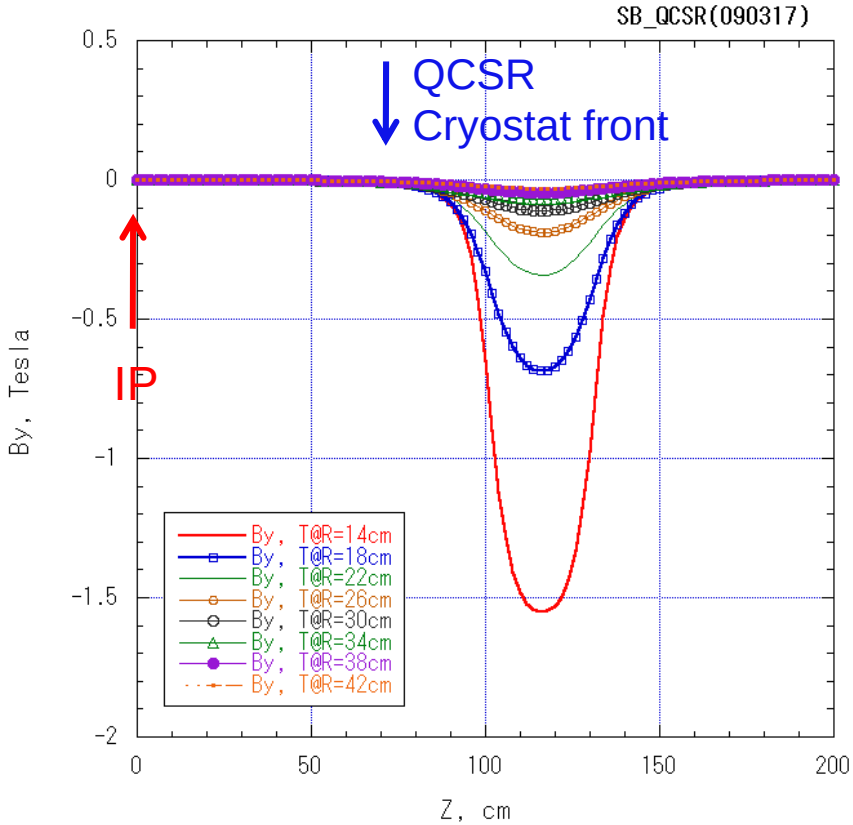

By components by QCSR
Location: $\theta = 0$ degree

Field profile by detector solenoid and compensation solenoids

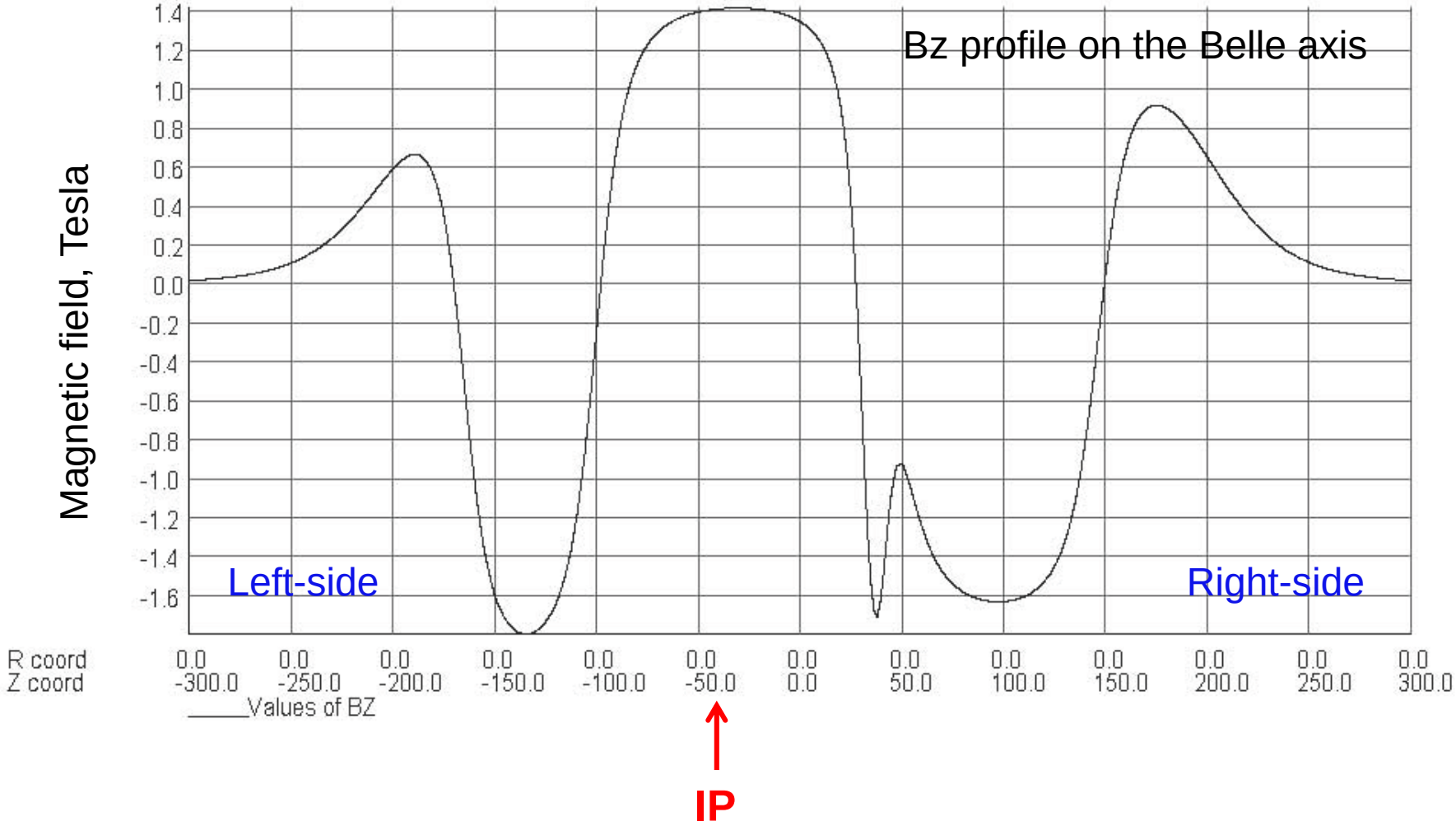

Summary

- For the updated IR beam optics:
  - QCSRD: the same design as described in LOI.
    - Magnetic center: Z=1163.3 mm
  - QCSLD: updated magnet design
    - Magnetic center: Z=-666.7mm (Z=-969.4 mm in LOI)
    - The magnets in the cryostat are designed to be cooled at 1.9 K for getting the field gradient of 121.1T/m.
    - In the present design, the front of the cryostat locates at 427 mm from IP.
- For installation of hardware into IR:
  - QCSL cryostat, IP beam pipe and SVD are proposed to be an integrated architecture.